Supercritical CO_2 Extraction and Processing of Oilseeds

By

G.R. LIST, J.P. FRIEDRICH and J.W. KING
U.S. Department of Agriculture, Agricultural Research Service
Northern Regional Research Center, Peoria, Illinois

ABSTRACT

SUPERCRITICAL CO_2 (SC-CO_2) extraction of oilseeds is a viable alternative to expeller and/or hexane extraction methods. Petroleum solvents lack the desired solute specificity and often require extensive downstream refining to produce quality oil and meal. At 50°C and 8,000 psi, triglycerides are only partially soluble in SC-CO_2, while at 80° and 12,000 they are completely miscible. A semicontinuous CO_2 extraction system is described that employs recycling SC-CO_2 at 3,000 psi to allow for flexibility in extraction of several vessels, either in series or parallel.

Characterization of crude soybean, corn, and cottonseed oils extracted under these conditions, show no increase in free fatty acids, phospholipids, or color at these higher extraction temperatures and flavor quality is maintained. By increasing SC-CO_2 extraction conditions (1600 gm flakes, 0.5-0.75 lbs CO_2/min) from 50° C and 8,000 psi to 80° C and 12,000 psi, extraction times are reduced from several hours to as little as ten minutes. SC-CO_2 extraction of cottonseed at 80° C and 12,000 psi yields crude oil having 1.2 per cent weight free fatty acids and a Lovibond red of 20 (5-1/4" depth). SC-CO_2 extracted cottonseed oil shows no tendency to undergo color fixation while in storage.

Because of their low gum contents, SC-CO_2 extracted soy and corn oils can be steam refined to yield a bland flavor-stable edible oil. Although SC-CO_2 extracted cottonseed is too dark for steam refining, the crude cottonseed oil can be refined with 0.1 per cent excess of ten per cent caustic to yield 98 per cent neutral oil.

INTRODUCTION

There has been a great deal of interest in supercritical fluid technology in the past ten years as evidenced by the scientific literature and popular articles in numerous news journals. One of the more active areas involves the extraction of oilseeds (1-16) with supercritical carbon dioxide (SC-CO_2). Because CO_2 is presently used in food products such as carbonated beverages, it is generally regarded as a safe solvent (GRAS) for extraction of a variety of agricultural products, including oilseeds. Additional advantages of SC-CO_2 include its low cost, lack of flammability, and ease of separation from extracted products by phase separation.

EXPERIMENTAL

Process Considerations

The most extraordinary property SC-CO_2 exhibits is its ability to dissolve seed oils in all proportions at temperatures above 80° C and pressures of 12,000 psi (figure 1). During the supercritical extraction of the seed oil, the measured solubilities will take on finite values which are considerably less than the potential solubility of the oil in the dense gas phase. This is because the recorded solubilities are a function of the ratio of available oil in the seed to the SC-CO_2 present in the extraction vessel.

For example, if the extraction vessel contained 100 g of soy flakes (20 per cent weight oil) and 100 g of SC-CO_2, the maximum measured solubility would be 20 per cent, not the theoretically possible 100 per cent, as predicted by the phase diagram.

To illustrate this phenomena, an experiment was conducted in which six one-inch O.D. × 22 inch-high pressure tubes were filled with soybean flakes and placed in series with respect to the flowpath of the SC-CO_2. Extraction was commenced at 12,000 psi and 90° C and under these conditions the initial flux of the oil into the SC-CO_2 produced a maximum solubility (wt. oil/wt. oil + wt. CO_2 passed) of 20.5 per cent. Upon reaching a quasi-steady state, the extraction experiment yielded an average solubility of 13.6 per cent, an amount still below the theoretical maximum oil solubility in SC-CO_2.

This level of recorded solubility remained fairly constant throughout the extraction run until tubes five and six began to be depleted of oil. Residual oil and moisture content of the extraction tubes are reported in Table I. Note that the oil content of the residual meal ranged from a value of 0.91 per cent in tube one to 17.98 per cent in tube six.

A similar experiment was also conducted using N_2 initially at a pressure of 12,000 psi and 90° C. Under these conditions, soybean oil is only sparingly soluble in the gas phase; hence the amount of oil vented from tube six in the nitrogen stream was negligible. However, when the N_2 flow was terminated, and CO_2 flow commenced into the extractor tubes, the oil flux into the supercritical fluid phase was initially enhanced to a maximum level of 43 weight per cent, due to the CO_2 contacting fresh oil as it moved through the seed bed.

These results document the appreciable solvent power of SC-CO_2 and the importance of the ratio of extractant to solvent (gas) in the extractor vessel. Residual oil and moisture analysis on the six extraction tubes utilized in the latter experiment are given in Table I.

Referring again to Figure 1, it is obvious that at temperatures below 55° C the solubility of triglycerides in SC-CO_2 is limited and shows a decreasing rate of increase at higher pressures. However, above 60° C the solubility increases rapidly with pressure, and at 70° C and 830 bar the verticality of the solubility curve indicates total miscibility. At 80° C and about 760 bar, the same trend is recorded.

Data from experiments conducted in a stirred autoclave further substantiate the solubility data (15). By the time the ideal pressure (760 bar) and temperature (80° C) are reached in the extraction vessel, the triglyceride is, for the most part, already extracted from the flaked seed and has been transferred to the SC-CO_2 phase. This can be essentially removed with one exchange of fresh SC-CO_2, assuming essentially plug-flow with minimal mixing.

FIGURE 1: SOLUBILITY OF TRIGLYCERIDES IN SC-CO_2 AS A FUNCTION OF TEMPERATURE AND PRESSURE

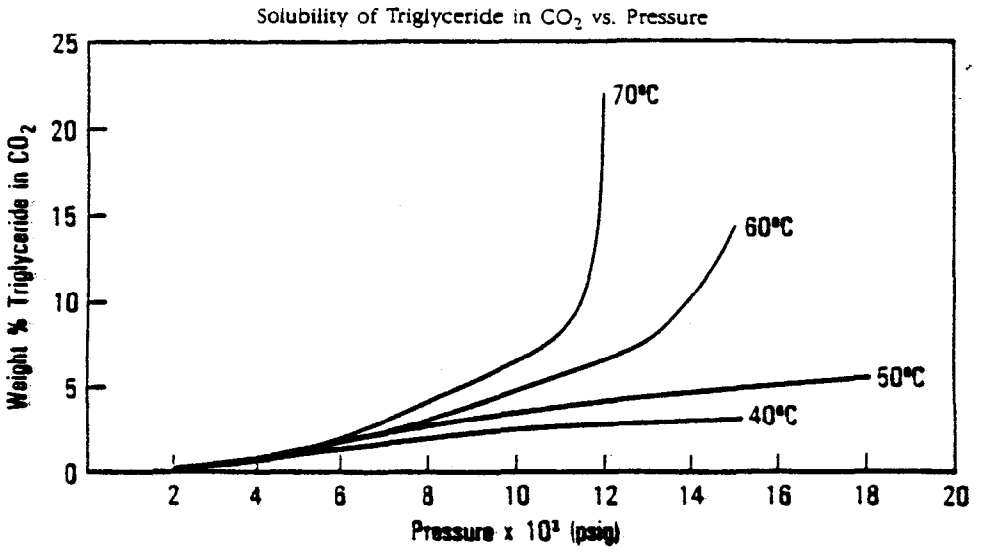

TABLE 1: EXTRACTION OF SOYBEAN FLAKES WITH SC-CO_2*

	CO_2		N_2/CO_2	
Tube	Moisture, %	Residual Oil, %	Moisture, %	Residual Oil, %
1	6.1	0.91	2.5	0.57
2	9.9	1.22	10.5	0.39
3	9.8	1.23	10.6	0.31
4	9.0	8.69	10.7	0.44
5	8.3	16.71	10.6	2.37
6	8.4	17.98	5.6	32.52

*12,000 psi—90°C

Equipment Considerations

Because of the high solubility of seed oils in SC-CO_2, it is possible to extract crushed and flaked or ground seed very rapidly by passing a stream of SC-CO_2 through the seed matrix at optimum extraction conditions (12,000 psi, 80° C) (8). Lowering the pressure as the oil-CO_2 solution leaves the extractor allows the oil to condense in a suitable receiver, and the CO_2 may be vented, stored, or recycled. A four-liter vessel filled with soy flakes (1600 gm) can be extracted by this method to a residual oil content of 0.5 per cent in eight minutes at a CO_2 flow rate of 125 to 190 l/min. Energy costs for compression and heat required for extraction are effectively offset by total recycle of the CO_2 at isothermal conditions. Recovery of oil is achieved by maintaining a pressure of 3,000 psi and a temperature of 80° C in the receiver. The oil-lean gas (0.03 per cent oil) is recompressed to extraction conditions and is recycled to the extraction vessel. The increased pressure assures that the oil remains in the dense-gas phase. Most of the energy of compression is expended between 1,000 psi (supply-tank pressure) and 3,000 psi. Above this pressure, the relatively dense CO_2 behaves much like a liquid, and the costs of further compression to 12,000 psi are minimized. Likewise, the Joule-Thompson effect (cooling effect) caused by decompression of the CO_2 from 12,000 psi to 3,000 psi in the receiver is also minimized, because it is not allowed to expand at pressures below 3,000 psi where, once again, the cost of compression would be considerable.

The pressure drop is achieved by a variable back-pressure relief valve. The solute precipitates and is collected in the receiver. The low-pressure CO_2 is recycled through a mass-flowmeter to the compressor and back through the seed bed. The extraction is judged complete when no more solute is collected in the receiver. Based on the weight of CO_2 that has passed through the mass-flowmeter, the extraction can be easily duplicated.

The above concepts have resulted in construction of a

versatile extraction system (figure 2) that can be adopted to a variety of extraction configurations. For example, with proper valve sequencing, it is possible to flow in parallel or series, in either direction, through the multiple extraction vessels. The three-vessel system allows two vessels to be in the extraction mode while the third is being emptied and refilled.

The flow direction may also be reversed "momentarily" to prevent packing of the seed bed. A second smaller auxiliary gas supply and compressor has been integrated into the system (figure 2), to replace the small amount of CO_2 lost from the closed system due to the sampling of the extract or system leakage. A pressure gauge equipped with a electric-contact face, is used to interrupt power to the compressor and activate an alarm at a preset pressure safety below the rated system pressure.

The high-pressure extraction side of the system consists of all components downstream from the main compressor, up to and including the back-pressure relief valve (BPRV). The minimum pressure rating of these components is 20,000 psi. The four-liter A-286 rust resistant, steel alloy extraction vessels are rated at 30,000 psi and are fitted with self-energizing metal seal-ring head closures. The vessels are also fitted with rupture disc assemblies set at 15,000 psi. The 1/4 inch-high pressure valves and tubing used in the assembly are rated at 60,000 psi. The low-pressure side of the system includes the receiver (10,000 psi), the mass flow meter (5,000 psi), and 1/4 inch low-pressure valves and tubing (10,000 psi) having larger bore to accommodate flow rates approaching two lb of CO_2/min at 2,500 to 3,000 psi.

Seed Preparation and Extraction Procedure

Oilseeds, in this case soybeans, are cracked and dehulled, after which they are passed through flaking rolls to yield flakes with a thickness of about 0.01 inch. As flake thickness increases, oil yield decreases because of the inaccessibility of the oil to the CO_2 (16). Conversely, depending upon the fineness of the particles and their oil content, blockage of flow can result at very high solvent rates (16).

Heated Vessels A, B + C (figure 2) are filled with flaked seed after placing a filter underneath and on top of the seed bed to prevent particulates from being transported throughout the system. The vessels are sealed and, with the vent valves 15 and 30 closed, the entire system is allowed to fill with CO_2 through the mass-flowmeter to tank pressure of 900 psi. Vessel C is isolated and vessels A and B are pressurized to 12,000 psi. After extraction temperature (80° C) is reached, CO_2 is allowed to flow from the compressor through vessels A and B to the receiver and back to the compressor. When A is completely extracted, B is isolated, and the CO_2 from vessel A is allowed to equilibrate with vessel C. The CO_2 is then

FIGURE 2: SEMI-CONTINUOUS SUPERCRITICAL CO_2-EXTRACTION SYSTEMS

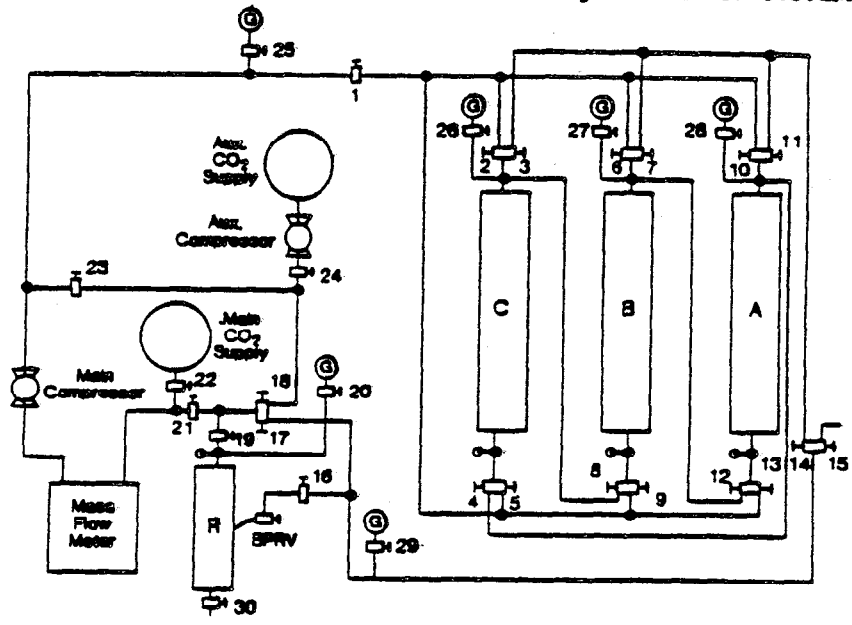

pumped from vessel A to C until the pressure in A drops below supply pressure. Vessel A is then vented and the extracted soyflakes removed by vacuum. Carbon dioxide is then drawn from the supply cylinder and compressed to complete the filling of vessel C to 12,000 psi. The extraction now proceeds from B to C until B is extracted. At the same time, vessel A is refilled with soyflake, sealed and prepared for the third step (i.e., extraction from C to A), which completes one full cycle of this semicontinuous system.

Quality of Oils Obtained by Supercritical CO_2 (SC-CO_2) Extraction of Oilseeds at High Temperatures and Pressure

Previous reports have described the quality of oils obtained by SC-CO_2 extraction of dry- and wet-milled corn germ, soyflakes, and cottonseed flake at low temperatures and pressures (1 - 8). Table 2 presents the results of studies of these seed oils obtained (four liter Batch Autoclave) at optimum extraction temperatures (70-90° C) and pressure(12,000 psi). Included for comparison to the SC-CO_2 extracted oils are typical products obtained from reliable commercial sources. The crude-degummed soybean oil was obtained by solvent extraction with hexane while the dry-milled corn germ oil and cottonseed oil were recovered with expellers. SC-CO_2 extraction of soybean and dry-milled corn germ yields crude oils equivalent to or better than the commercially processed crudes with respect to color, fatty acid content, and refining loss.

Supercritical CO_2 extraction of cottonseed yields crude

TABLE 2: SC-CO_2 EXTRACTION OF DRY-MILLED CORN GERM, SOY FLAKES AND COTTONSEED FLAKES AT HIGH TEMPERATURES AND PRESSURE

CO_2 extraction temp. C	Pressure psi	Color[a] Y	Color[a] R	FFA %	phos. ppm	Ref. loss %	Peroxide Value meq/kg
				corn germ-oil			
70	12,000	70	10	0.5	3	1.4	0
80	12,000	70	11	0.5	1	1.6	0
90	12,000	70	11	0.5	1	1.0	0
Comm'l expeller	—	70	12	0.7	120	1.6	0
				soy flake-oil			
70	12,000	70	12	0.3	1	0.5	0.1
80	12,000	70	12	0.3	1	0.6	0.2
90	12,000	70	12	0.3	1	0.5	0.2
Comm'l hexane degummed	—	70	10	0.3	50	1.0	0
				cottonseed flake-oil			
70	12,000	70	16	1.2	2	1.4	0.1
80	12,000	70	20	1.2	5	1.5	0.2
90	12,000	70	20	1.2	13	1.5	0.1
Comm'l expeller	—	70	20	1.0	386	3.6	0

[a]Lovibond color scale, all values read at 5-1/4" depth except the crude commercial expeller cottonseed oil at 1" depth. 1600 g charge, 4 liter Batch Autoclave (4).

oils having much lighter colors than either prepressed solvent extracted or expeller-processed crudes. The latter oils are often so dark that their colors cannot be matched at the 5-1/4 inch depth in the Lovibond Colorimeter tubes and must be matched at one inch instead. Even under the most stringent CO_2 extraction conditions (i.e., 90° C and 12,000 psi), crude cottonseed oils are light enough to be matched at the 5-1/4 inch depth.

Free fatty acid and phospholipids, the major components contibuting to refining losses, are both recovered with crude oils obtained by solvent extraction or expeller pressing. On the other hand, crude oils extracted by SC-CO_2 have only free fatty acids. Phospholipids are essentially insoluble, as shown by the low phosphorous contents of the CO_2-extracted oils. Thus, CO_2-extracted crude oils show lower refining losses and yield more natural oil than solvent or expeller crudes. The low solubility of phospholipids in SC-CO_2 may be a potential disadvantage because phospholipids help protect crude oils from oxidative deterioration in storage (7). Recent work has shown that the addition of phospholipids or phenolic antioxidants improve the oxidative stability of CO_2-extracted oils (13).

Crude cottonseed oil contains appreciable amounts of gossypol and other dark-colored pigments (17) that must be removed in order to produce an edible product. With other factors being equal, the extent of color removal in crude cottonseed oil is determined primarily by the amount of excess caustic soda employed in refining. In order to meet color specifications for finished salad oil or shortening stocks, good-quality cottonseed oils may require 0.5 per cent excess caustic soda (17).

The data indicating the effect of processing on the color of crude cottonseed oil extracted with SC-CO_2 at 12,000 psi and 70-90° C are shown in Table 3. The results show that as little as 0.2 per cent excess refining lye produces products having acceptable colors.

Expeller- or solvent-extracted crude cottonseed oil may contain 0.2 per cent gossypol, whereas SC-CO_2-extracted oil (80° C—12,00 psi) contains about .02 per cent (6). Normally, the bulk of the highly colored pigments are removed during processing. Storage of crude cottonseed oil increases color fixation (17-18). Upon heating or extended storage, the colors become difficult or impossible to remove. The extent of color fixation in cottonseed oils extracted at 12,000 psi, at temperatures of 60-90° C, is shown in Figure 3a. Figure 3a shows that freshly extracted crude oil (no storage) had refined colors in the four-five Lovibond red range. After three weeks' storage at 40° C (104° F), color fixation occurred, but was less severe in oils extracted at higher temperatures.

Figure 3b plots the refined colors against the extraction time. The extent of color fixation is directly proportional to the residence time in the extractor (i.e., the longer the extraction time, the greater the extent of color fixation).

TABLE 3: EFFECT OF PROCESSING ON COLOR OF SC-CO_2-EXTRACTED COTTONSEED OIL

Extraction		Lovibond color (5 1/4")							
Temp.	Pressure	Crude		Refined[a]		Bleached[b]		Deodorized[c]	
C	psi	Y	R	Y	R	Y	R	Y	R
60	12,000	70	16	35	4	30	2.0	10	0.3
70	12,000	70	16	35	5	30	3.0	10	0.3
80	12,000	70	20	35	5	30	3.0	10	0.3
90	12,000	70	20	35	5	30	3.0	10	0.3

[a]Refined with 0.30 excess 10% lye.

[b]Bleached 80° C, 0.5% activated clay, vacuum.

[c]Deodorized 3 hr, 230° C, .1 mm Hg.

TABLE 4: POTENTIAL SAVINGS-REFINING OF CO_2-EXTRACTED COTTONSEED OIL

Plant Refines 15 Tank Cars Oil/Day, 240 Days/Year
Crude Oil 1.2% F.F.A.; Value $.20/Lb.

Process	% Neutral oil	Value neutral oil	Savings Day	Savings Year
Solvent or expeller	95	$[illegible]	$3,[illegible]	$[illegible]
CO_2	99	$[illegible]		

	Refining loss[a] cost			Savings	
	% Reduction	Cost/Day	Cost/Year	Day	Year
Solvent or expeller[b]	0.3	$1,[illegible]	$[illegible]	$ 540	$129,[illegible]
CO_2	0.1	$ 720	$[illegible]		
			Total Savings		$[illegible]

[a]Lye refining, cost $.02/lb.

[b]Crude oil 1.20 F.F.A.

TABLE 5: QUALITY OF OIL OBTAINED BY SC-CO_2 EXTRACTION 3

	CO_2 Extraction			Lovibond[a] Color		Flavor Scores	
Oil	Temp, C	Pressure psi	Refining method[b]	Y	R	0 Time	4 Day, 40° C
Dry	50	8,000	Caustic	5	0.3	7.4	6.3
Dry	80	12,000	Steam	6	0.1	7.8	6.3
Conv-dry	50	11,000	Caustic	8	0.3	7.0	5.32
Conv-dry	80	12,000	Steam	5	0.1	7.8	6.5
Continuous	50	8,000	Caustic	10	0.3	7.6	6.9
Continuous	80	12,000	Caustic	10	0.3	7.1	6.3

[a]5/4" column oil.

[b]Refined 0.10 excess 10% lye, bleached 1/20 act. clay vac, deod. 3 hr, 230° C, 1 mm Hg.

Steam refining: Treat with 0.10 H_3PO_4, wash, bleach 1/20 clay steam refine 3 hrs @ 200° C.

The processing of cottonseed oil obtained by SC-CO_2 extraction offers some potential saving over that obtained by expellers and solvent-extraction methods. Table 4 compares the savings realized in neutral oil yields and caustic soda costs for a plant refining 15 tank cars (60,000 lbs/car) of oil per day, 240 days a year. Assumptions are that the crude cottonseed oil contains 1.2 per cent free fatty acids and it is to be refined with ten per cent caustic soda ≅14°Be" with 0.3 per cent excess for the expeller or solvent oil, and 0.1 per cent excess for the SC-CO_2-extracted oil. The cost of the refining lye is calculated to be three cents/pound based on recent figures. The value of refined oil is assumed to be 20 cents/pound. At a two per cent increase in neutral oil from SC-CO_2 extraction, an additional 18,000 pounds of oil is obtained per day valued at $3,600, which over a 240-day operating schedule amounts to $864,000.

Refining of crude expeller- or solvent-extracted cottonseed crude at 0.3 per cent excess caustic involves a cost of $1,269/day for the lye, while an excess of 0.1 per cent costs the refiner $729, or a savings of $540/day. Similarly, over a 240-day operating year, a savings of $130,000 would be realized. Thus, switching from solvent or expellers to CO_2-extraction of cottonseed would yield a savings of nearly $1,000,000/year by decreasing the lye requirements and increasing the yield of neutral oil.

The quality of corn oil, cottonseed oil, and soybean oil obtained at high extraction temperatures and pressure was investigated and results are shown in Table 5. Included for

FIGURE 3: COLOR FIXATION IN SUPERCRITICAL CO_2-EXTRACTED COTTONSEED OIL

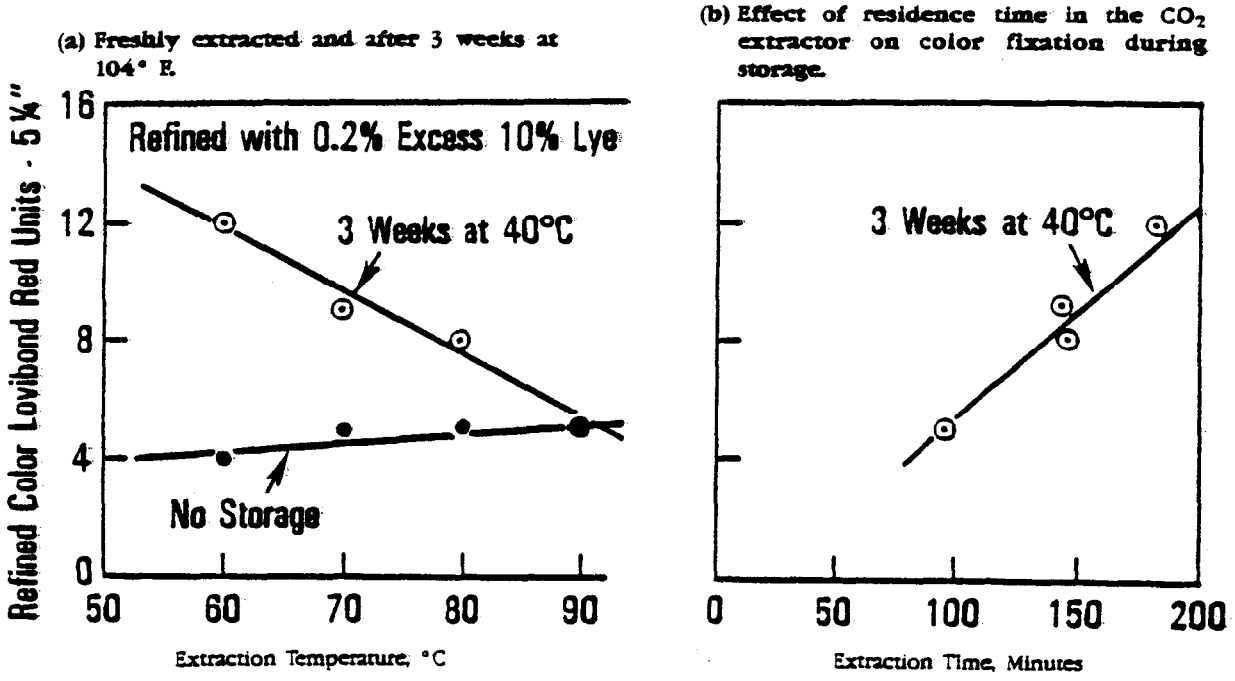

comparison are finished oils extracted at 50° C and 8,000 psi. Salad oils of good initial (0 time) quality will have a flavor of score 7.0-8.0 on a ten-point scale (ten = bland, one = extreme) and will score about six after four days' storage under Schall oven storage conditions (19). The results show that oils of good quality can be prepared from crude oils SC-CO_2 extracted at high temperatures. In addition, after four days' storage at 60° C, most of the flavor scores exceed six. SC-CO_2-extracted soybean and corn oils, because of their low gum and free fatty acid contents, are ideal for steam refining; however, cottonseed oil is too dark for steam refining. Lovibond colors of both caustic- and steam-refined SC-CO_2 crude oils are much lighter than trading-rule specifications (20).

No evidence was found to indicate any increase in free fatty acids, color, refining losses, or impairment of flavor stability as a result of increasing SC-CO_2-extraction parameters to 70-90° C and 12,000 psi.

Acknowledgement

J.H. Johnson assisted with the CO_2 extractions.

References

1. Friedrich, J.P., and G.R. List, *J. Agric. Food Chem.* 30:192 (1982).
2. Friedrich, J.P., G.R. List, and A.J. Heakin, *J. Am. Oil Chem. Soc.* 59:288 (1982).
3. Christianson, D.D., J.P. Friedrich, G.R. List, K. Warner, A.C. Stringfellow, E.B. Bagley, and G.E. Inglett, *J. Food Sci.* 49:229 (1984).
4. Friedrich, J.P., and E.H. Pryde, *J. Am. Oil Chem. Soc.* 61:5340 (1984).
5. List, G.R., J.P. Friedrich, and D.D. Christianson, *J. Am. Oil Chem. Soc.* 61:1847 (1984).
6. List, G.R., J.P. Friedrich, and J. Pominski, *Ibid* 61:1849 (1984).
7. List, G.R., and J.P. Friedrich, *Ibid* 62:82 (1985).
8. Friedrich, J.P., U.S. Patent 4,446,923, August 21, 1984.
9. Stahl, E., Ferte Siefen, *Asntrichm* 84:444 (1982).
10. Stahl, E., E. Schultz, and W. Schilz, *J. Agri. Food Chem.* 28:1153 (1980)
11. Zhao, W., A. Shishikura, K. Jujimoto, K. Ari, and S. Saito, *Agric. Biol. Chem.* 51:1772 (1987).
12. Fattori, M., N.R. Bulley, and A. Meisen, *J. Agric. Food Chem.* 35:1739 (1987).
13. List, G.R., and J.P. Friedrich, *J. Am. Oil Chem. Soc.* 66:98-101 (1989).
14. Taniguchi, M., T. Tsuju, M. Shibiita, and T. Kobayashi, *Agric. Biol. Chem.* 49:2367 (1985).
15. Eissler, R., and J.P. Friedrich *J. Am. Oil Chem. Soc.* 65:764-767 (1988).
16. Snyder, J.M., J.P. Friedrich, and D.D. Christianson, *Ibid.* 61:1851 (1984).
17. Bailey, A.E., "Cottonseed and cottonseed products, their chemistry and technology," Interscience Publishers, New York (1984).
18. Vix, H.L.E., E.F. Pollard, J.J. Spadaro, and A. Gastrock, *Ind. Eng. Chem.* 38:635 (1946).
19. Evans, C.D., G.R. List, H.A. Moser, and J.C. Cowan, *JOACS* 50:218 (1973).)
20. Federal Specifications, Salad Oil Vegetable JJJ-S-309, Federal Supply Services, General Services Administration, March 24, 1978.

Presented at the 37th Oilseed Processing Clinic, held in New Orleans, Louisiana, March 14-15, 1988.

The mention of trade names or trade products does not imply that they are endorsed or recommended by the U.S. Department of Agriculture over other firms or similar products not mentioned.